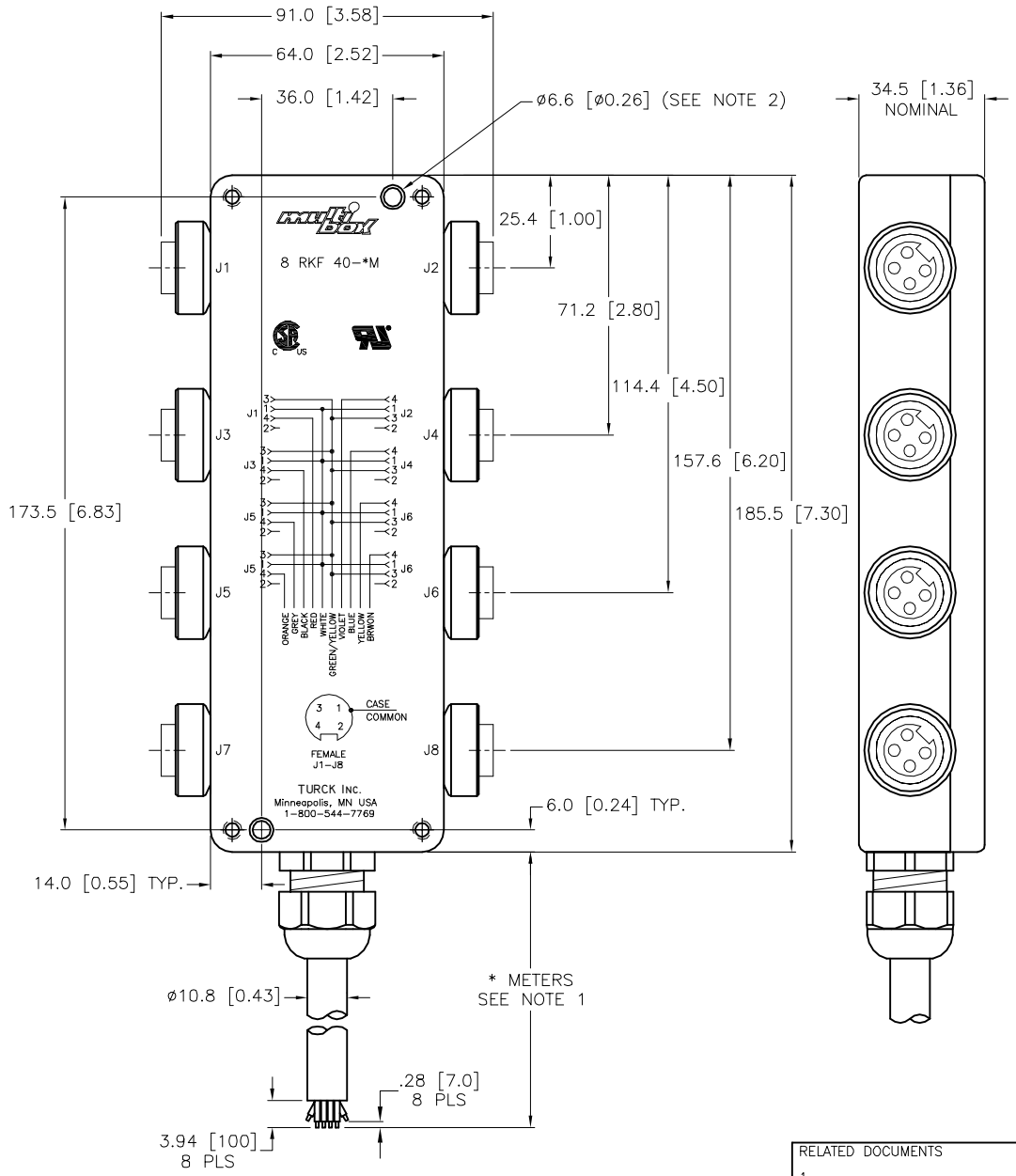

SPECIFICATIONS	
HOUSING MATERIAL	ALUMINUM ALLOY
HOUSING FINISH/COLOR	POWDER COAT/BLACK
HOUSING MATERIAL/PLATING	BRASS/NICKEL
CONTACT CARRIER MATERIAL	TPU
CONTACTS MATERIAL/PLATING	BRASS/GOLD
CABLE JACKET MATERIAL/COLOR	PVC/BLACK
NUMBER OF CONNECTORS [AWG]	8X18 AWG
DRAIN/SHIELD	20 AWG/ALUM.-POLYESTER FOIL
OPERATING VOLTAGE	250 VAC/300 VDC
OPERATING CURRENT	4.0 A PER PORT, 9.0 AMP TOTAL
PROTECTION CLASS	NEMA 1,3,4,6P,12 & IECIP67, IP68,IP69,IP69K
OPERATING TEMPERATURE	-30°C to +80°C (-22°F to +176°F)

FEMALE END VIEW J1-J8

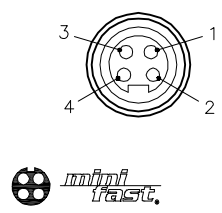

WIRING DIAGRAM

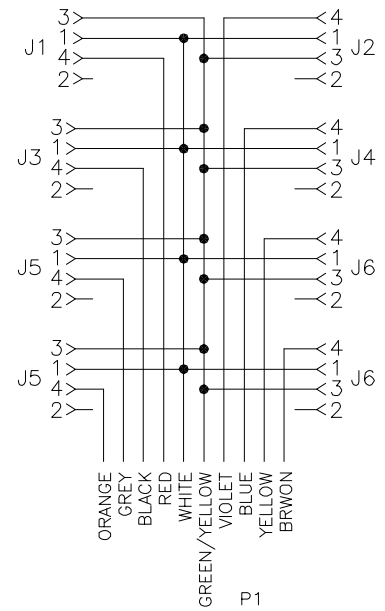

CABLE LENGTH	TOLERANCE *
ALL LENGTHS	+ 4% (OR 50mm) OF LENGTH - 0% (OR 0mm) OF LENGTH WHICHEVER IS GREATER
STRIP LENGTH	**TOLERANCE ***
0-7mm	±0.5mm
8-29mm	±1.0mm
30-49mm	±2.0mm
50-69mm	±3.0mm
70-100mm	±4.0mm
OVER 100mm	±5.0mm
* UNLESS OTHERWISE SPECIFIED	

SOURCE DRAWING - FOR REFERENCE ONLY

NOTES:

1. "*" DESIGNATES CABLE LENGTH IN METERS. CONTACT TURCK TO ORDER SPECIFIC LENGTHS.

2. CLEARANCE HOLE FOR #8 [M4] MOUNTING SCREWS (2 NOT INCLUDED).

REV	DESCRIPTION	BY	DATE	ECO NO.
I	UPDATE PROTECTION CLASS	CBM	04/13/21	76628

RELATED DOCUMENTS
1.
2.
3.
4.

3RD ANGLE PROJECTION

THIS DRAWING IS CONFIDENTIAL AND THE PROPERTY OF TURCK INC. USE OF THIS DOCUMENT WITHOUT WRITTEN PERMISSION IS PROHIBITED.

TURCK

3000 CAMPUS DRIVE
MINNEAPOLIS, MN 55441
1-800-544-7769
(763) 553-7300
(763) 553-0708 fax
www.turck.us

MATERIAL: SEE SPECIFICATIONS

FINISH: SEE SPECIFICATIONS

ALL DIMENSIONS DISPLAYED ON THIS DRAWING ARE FOR REFERENCE ONLY

CONTACT TURCK FOR MORE INFORMATION

DRFT: IK | DATE: 1/15/97

DSGN | SCALE: 1=2

UNIT OF MEASUREMENT: MILLIMETER [INCH]

DO NOT SCALE THIS DRAWING

DESCRIPTION: 8 RKF 40-*M

IDENTIFICATION NO.

REV: I

FILE: 777001287

SHEET 1 OF 1